TOUCH®
Furniture accessories
HIGH QUALITY

TCH-22401 SERIES

45mm Push to Open Soft-Close Ball Bearing Slides

Specifications

Space required

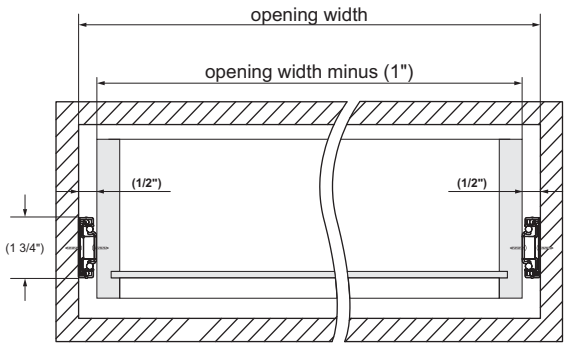

Extension length

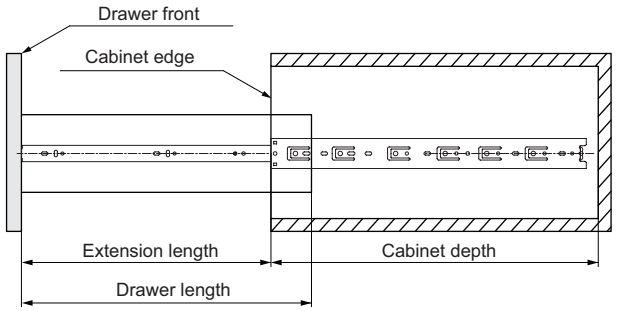

Holes pattern and length specifications

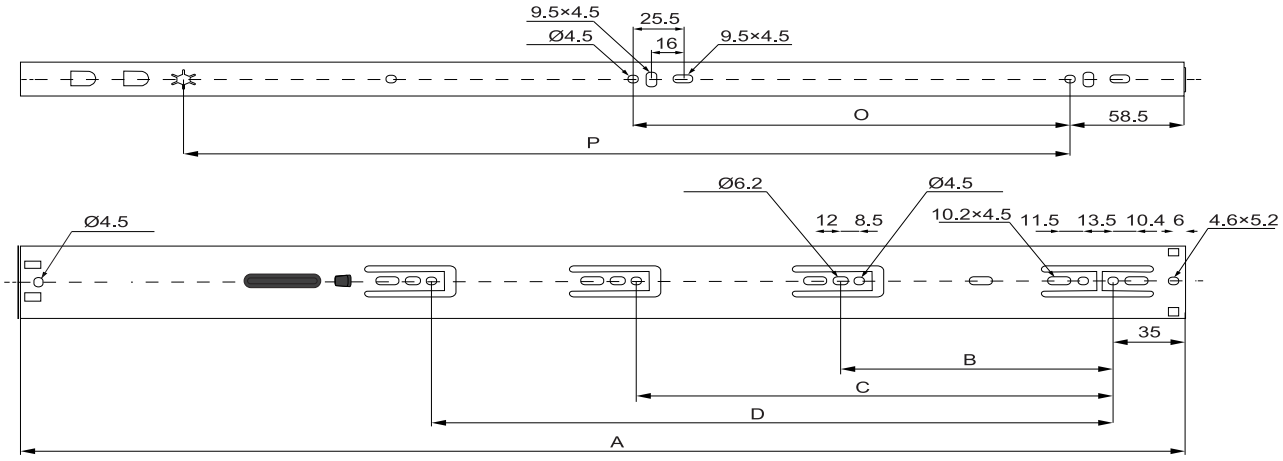

Item number	Drawer length	Extension length	Mounting holes distance					
			A	B	C	D	O	P
TCH-22401 250	(10") 250mm	147mm	250	--	--	--	--	--
TCH-22401 300	(12") 300mm	248mm	300	96	--	--	80	137
TCH-22401 350	(14") 350mm	315mm	350	72.5	128	--	128	187
TCH-22401 400	(16") 400mm	380mm	400	128	183.5	--	128	237
TCH-22401 450	(18") 450mm	446mm	450	128	224	--	160	287
TCH-22401 500	(20") 500mm	496mm	500	128	224	288	192	337
TCH-22401 550	(22") 550mm	546mm	550	128	224	320	192	387
TCH-22401 600	(24") 600mm	596mm	600	128	224	352	224	437

TOUCH®
Furniture accessories
HIGH QUALITY

TCH-22401 SERIES

45mm Push to Open Soft-Close Ball Bearing Slides

Installation Instructions

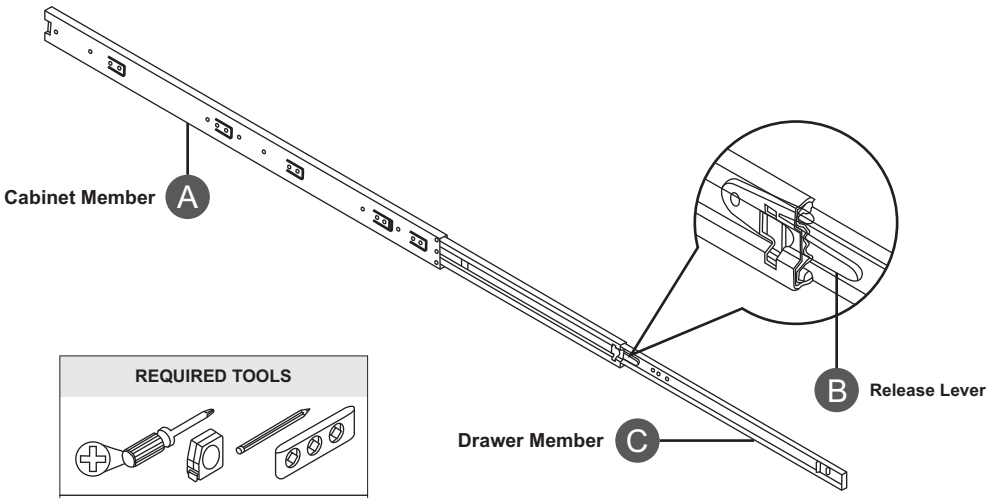

REQUIRED TOOLS

1/2" Pan Head Wood Screws x12

SPECIFICATIONS

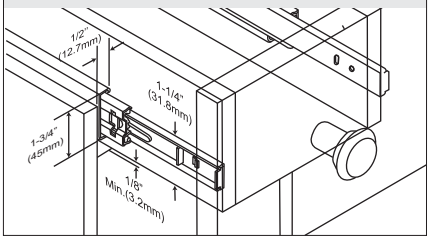

IMPORTANT:

- Please READ through all instructions before you begin.
- To avoid binding, drawer must be 1/2" narrower than cabinet opening on each side.
- Top and bottom of drawer should have 1/8" minimum clarence from cabinet opening.
- For face-frame cabinets, Rear Mount Socket is required.

1

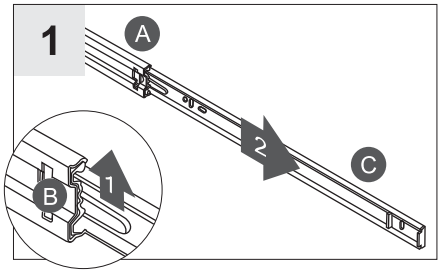

Press release the lever (B). Remove drawer member (C) from the Cabinet member (A).

2

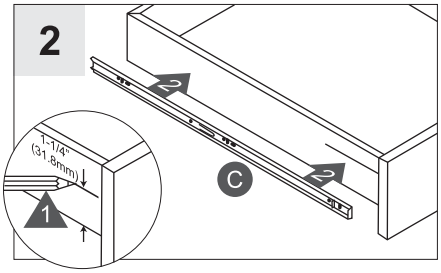

Mark 1-1/4" (32mm) from the bottom of the drawer side panel. Align the top of the drawer member (C) with mark.

3

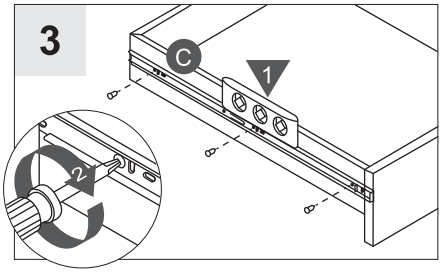

Make sure the drawer member (C) is level. Secure with screws. Repeat Steps 1-3 for the remaining drawer member.

4

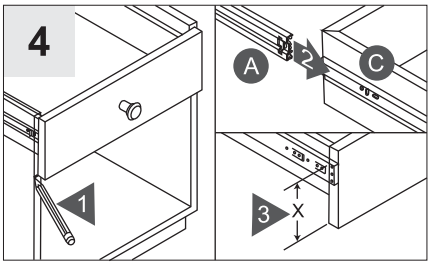

Determine drawer position. Mark bottom of the drawer front on the left and right sides. Place cabinet members (A) onto the drawer members (C). Measure "X".

5

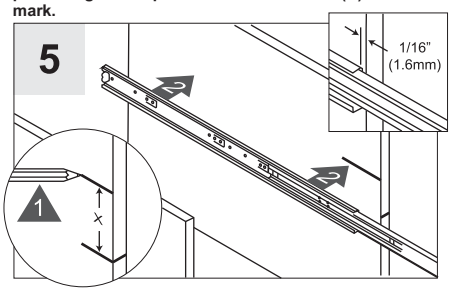

Mark "X" from the bottom of the mark. Repeat Step #1 to remove drawer member (C) from the Cabinet member (A). Align top of the cabinet member (A) with the mark, 1/16" form the front of the cabinet.

6

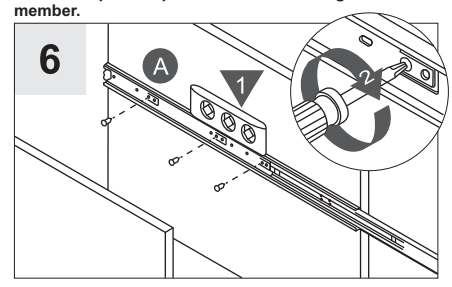

Make sure cabinet member (A) is level, secure with the screws. Repeat for the remaining cabinet member (A). Insert the drawer member (C) into the cabinet member (A) and close the drawer. Release member (B) will automatically locks.